University of Michigan
Taubman College of Architecture and Urban Planning

FABLab Student Handbook

version 7.0

IMPORTANT INFORMATION:

FABLab Director
Wes Mcgee
wesmcgee@umich.edu
Room 1224

FABLab Managers & Research Associates
Asa Peller
asapel@umich.edu
Dustin Brugmann
brugmann@umich.edu
Room 1225

FABLab website:
https://taubmancollege.umich.edu/architecture/facilities-resources/digital-fabrication-lab

Router scheduling email:
taubmancollegerouter@umich.edu

Water jet scheduling email:
taubmancollegewaterjet@umich.edu

3D print scheduling email:
taubmancollege3dprinters@umich.edu

Zund training/assistance email:
taubmancollegezund@umich.edu

Laser training/assistannce email:
taubmancollegelasers@umich.edu

FABLAB POLICIES

The FABLab serves two primary purposes at Taubman College:

1. It provides a variety of advanced material processing services for student and faculty research.
2. It is a hub for research into the possibilities of advanced industrial manufacturing technologies affecting the conception and construction of architectural space.

To ensure that the FABLab is able to safely and efficiently meet the demands of both purposes, baseline policies have been put in place. All announcements regarding policy changes will be made via email through the Taubman College student mailing list. Long-term policy changes will be reflected on the FABLab website and in the next iteration of the FABLab Student Handbook. When in doubt about any policies, please consult the FABLab website for clarification.

Taubman College faculty members should consult the FABLab Faculty Handbook for information regarding to faulty use of the facilities, machine expenses, etc.

ACCESS

Use of the FABLab is open to current Taubman College students and students from other departments enrolled in cross-listed Taubman College courses. The FABLab will perform CNC routing or water jet cutting services for students from other colleges depending on the current workload in the lab. Students from outside of Taubman College that wish to have work done through the FABLab should contact the FABLab Manager prior to attempting to schedule machine time.

Access policies for the equipment in the FABLab varies from machine to machine. Each machine's access policies are explained below in the corresponding section of this handbook and on the FABLab website. It is highly recommended that you speak with the FABLab Manager prior to undertaking new projects as they will be able to provide input on issues you may not have considered such as material limitations, fabrication constraints, and project scheduling. Please email the FABLab Manager to schedule a time to discuss projects.

Any violation of the policies included in this handbook can result in the loss of FABLab access at the discretion of the FABLab Director.

SAFETY

The FABLab strives to provide safe access to its equipment to the entirety of the Taubman College community. As a variety of work takes place throughout the FABLab on a daily basis there are a handful of basic safety rules that need to be followed **at all times** within the FABLab**:**

- **Never, under any circumstance, work in the FABLab alone.**
- Only use equipment that you have been approved to use by the FABLab Manager or the FABLab Director.
- Closed-toe shoes must be worn at all times, even if just passing through.
- Safety glasses and hearing protection are to be worn whenever operating any FABLab equipment or in proximity of active equipment.
- Appropriate clothing should be worn whenever working in the FABLab. Loose, billowy clothing that can get caught on equipment should be avoided at all times.

ETIQUETTE

Students should conduct themselves in a professional manner at all times, including all interactions with their fellow students, lab assistants, and FABLab staff.

Students are required to dispose of any sawdust/scrap and put away tools in their proper location when finished working.

Any hardware and consumables stored in the FABLab are for use by FABLab staff. Hand tools, power tools, and equipment are not to be removed from the FABLab under any circumstances.

Please refer to the University of Michigan Division of Studen Affairs website for detailed information on all official university conduct policies: *www.studentpolicies.dsa.umich.edu*

HOURS

The FABLab operates on a demand-based schedule that can vary from semester to semester.
Please consult the FABLab website for the current machine and lab assistant schedules.

COSTS

Costs for the equipment in the FABLab varies from machine to machine. Each machine's costs are explained below in the corresponding section of this handbook and on the FABLab website. As machine expenses are typically updated on a yearly basis, please verify all costs prior to starting a job.

MATERIAL SALES

The FABLab has a number of commonly used materials (plywood, Plumcreek MDF, PETG sheet, etc.) for sale. Please check with an on-duty lab assistant or the FABLab Manager for the semester's current selection and prices.

MATERIAL STORAGE

If space allows materials to be cut can be temporarily stored in the FABLab for up to one day prior to the cut appointment. Please talk to a Lab Assistant or the FABLab Manager prior to storing any material. All stored materials must be labeled with your name, uniqname, and appointment date/time; any material left unattended, unlabled, or past their appointment date will be used or discarded.

At the conclusion of a job it is the student's responsibility to cut down any scrap material and properly discard it inside the woodshop dumpster. Project components and material that the student wishes to keep must be removed from FABLab immediately. **No exceptions.**

Students requiring space for material storage or project assembly should contact the FABLab Manager to inquire about reserving space in the Student Research area (room 1203).

FABLAB RESOURCES

In order to properly facilitate it's use as both a production and research resource, the FABLab has a number of specific hardware and software tools at its disposal. Ranging from traditional hand tools to advanced digital fabrication hardware, these tools allow for students to construct complex projects from a variety of different materials.

HARDWARE

3-axis CNC Routers:
Mills 3D surfaces out of solid materials and cuts 2D profiles of flat stock materials. Currently available to students through the FABLab's trained Lab Assistants.

Models:
CR Onrud 96C18
CR Onsrud 96C12
http:/www.cronsrud.com/

5-axis CNC Router:
Able to process larger and more complex 3D surfaces than the 3-axis CNC router. Currently available to students on a case-by-case basis with the approval of the FABLab Director or FABLab Manager.

Model:
CR Onrud F98HD15
http://www.cronsrud.com/

3-axis CNC Milling Machines:
Mills 2D and 3D components out of most metals (aluminum, stainless steel) and plastic. Used primarily for in-house tooling development. Currently available to students on a case-by-case basis with the approval of the FABLab Director or FABLab Manager.

Models:
Southwentern Industries TRAK DPM SX2
http://www.southwesternindustries.com/

HAAS VF-2SSYT
http://haascnc.com/

CNC Abrasive Water Jet Cutter:
Cuts accurate parts out of flat stock, including metals and plastics. Currently available to students through the FABLab's trained lab assistants.

Model:
Flow IFB 4800 w/ dynamic head
http://www.flowcorp.com/

CNC Knife Cutter:
Quickly and accurately cuts thin sheet materials (chipboard, plastics) with a 4-axis knife edge. Essentially an automated Exacto blade. Currently available directly to students through a self-serve online calendar.

Model:
Zünd G3 M-2500
http://www.zund.com/

Industrial Robots:
Large and small format industrial robotic workcells used as fabrication research platforms. Currently available to students through coursework taught by the FABLab Director.

Models:
KUKA KR-120 R2700 extra HA w/ Roboteam software (2x)
KUKA KR-60 (2x)
KUKA KR-6 R900 sixx (2x)
http://www.kuka.com/

3D Printers:
Prints 3D models from a digital file in either ABS plastic or gypsum. Currently available to students through the FABLab's trained lab assistants.

Models:
Dimension 768 SST
Dimension 1200 ES
Dimension uPrint SE Plus
http://www.dimensionprinting.com/

Laser Cutters:
Cuts 2D geometries from sheet material, typicall paper/wood and select plastics. Machines located in the design studio are currently available directly to students through a self-serve online calendar; those located in the Art and Architecture Shop are reserved via signup sheet located at the machines.

Models:
Universal Laser Systems VLS6.60 (3x - design studio)
http://www.ulsinc.com/

LaserCAMM Model 2305 (2x - A&A Shop)
http://www.lasercamm.com/

3D Digitizer:
Allows you to digitally capture points and curves from physical artifacts. Currently available to students on a first-come, first-served basis.

Model:
MicroScribe 3D Digitizer
http://www.revware.net/

SOFTWARE

MasterCAM 2017

A stand-alone software packaged used to generate CNC machining toolpaths from 3D models. Used to generate code for the 3-axis CNC routers, 5-axis CNC router, 3-axis CNC mills, and industrial robots.

There are multiple license of MasterCAM X7 available for student use in the BT Lab.
http://www.mastercam.com

SuperMatter Tools

A plug-in for the Rhinoceros 3D modeling software that allow for the generation and simulation of 7-axis toolpaths for the FABLab industrial robots. SuperMatter Tools is the primary software used in the FABLab for programming industrial robots.

Students looking for access to SuperMatter Tools should talk to the FABLab Director.

Flowpath

Software for generating toolpaths for the FABLab's CNC abrasive water jet cutter.

There are multiple licenses of Flowpath available for student use in the BT Lab.
http://www.flowcorp.com/

OTHER RESOURCES

In addition to these digital tools the FABLab also has hand and power tools for working with a variety of materials. These tools are for use in the FABLab and should not be removed from the FABLab under any circumstances. If tools are needed elsewhere on campus the Art and Architecture Shop has a number of tools which students can borrow with their student ID.

The Taubman College Metals Lab and Structures Laboratory are located in the same space as the FABLab but operate independently. Students looking for access to the Metals Lab should contact Prof. Mick Kennedy (mickk@umich.edu); those looking for access to the Structures Laboratory should contact Prof. Peter von Buelow (pvbuelow@umich.edu).

FABLab Layout

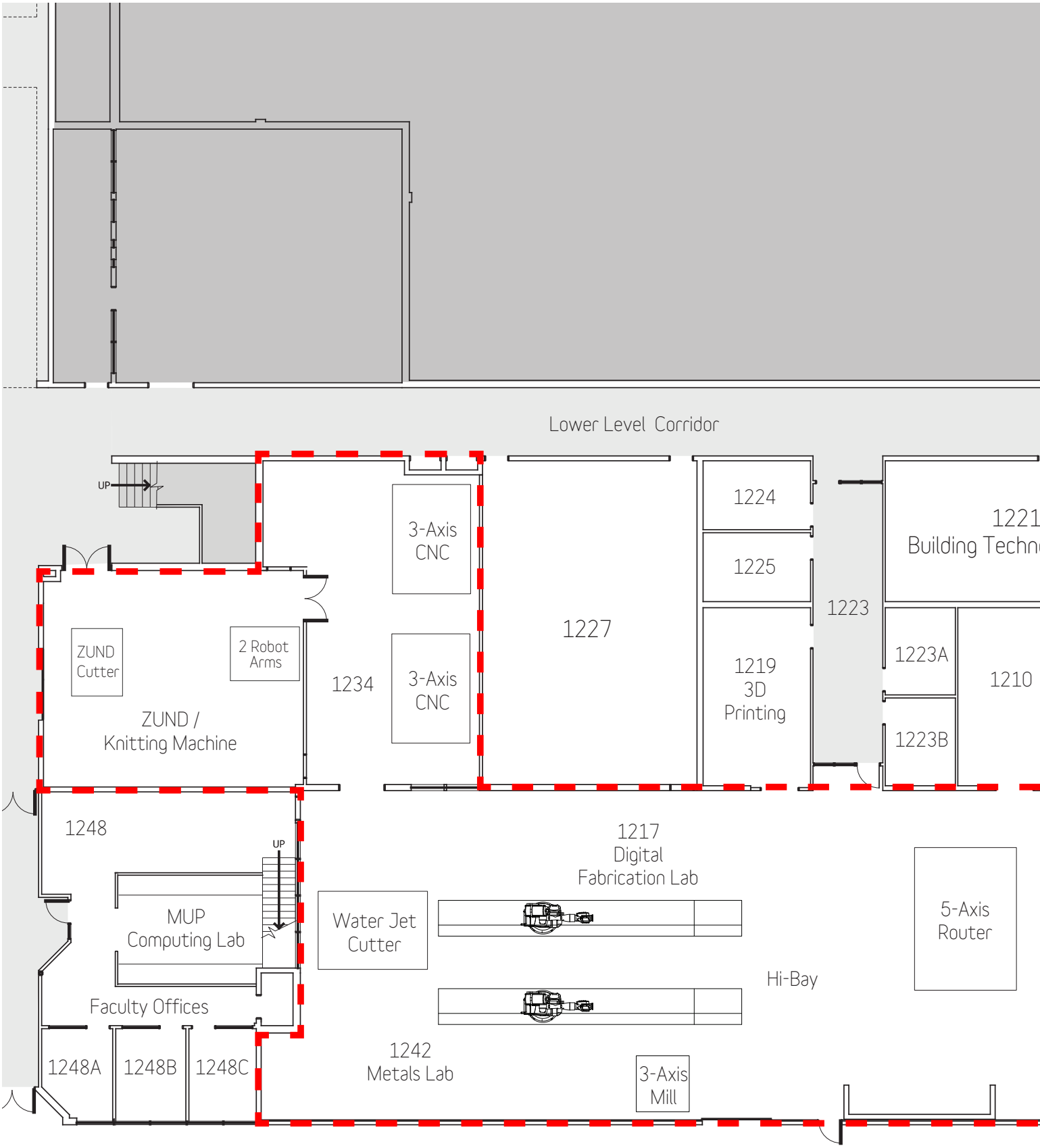

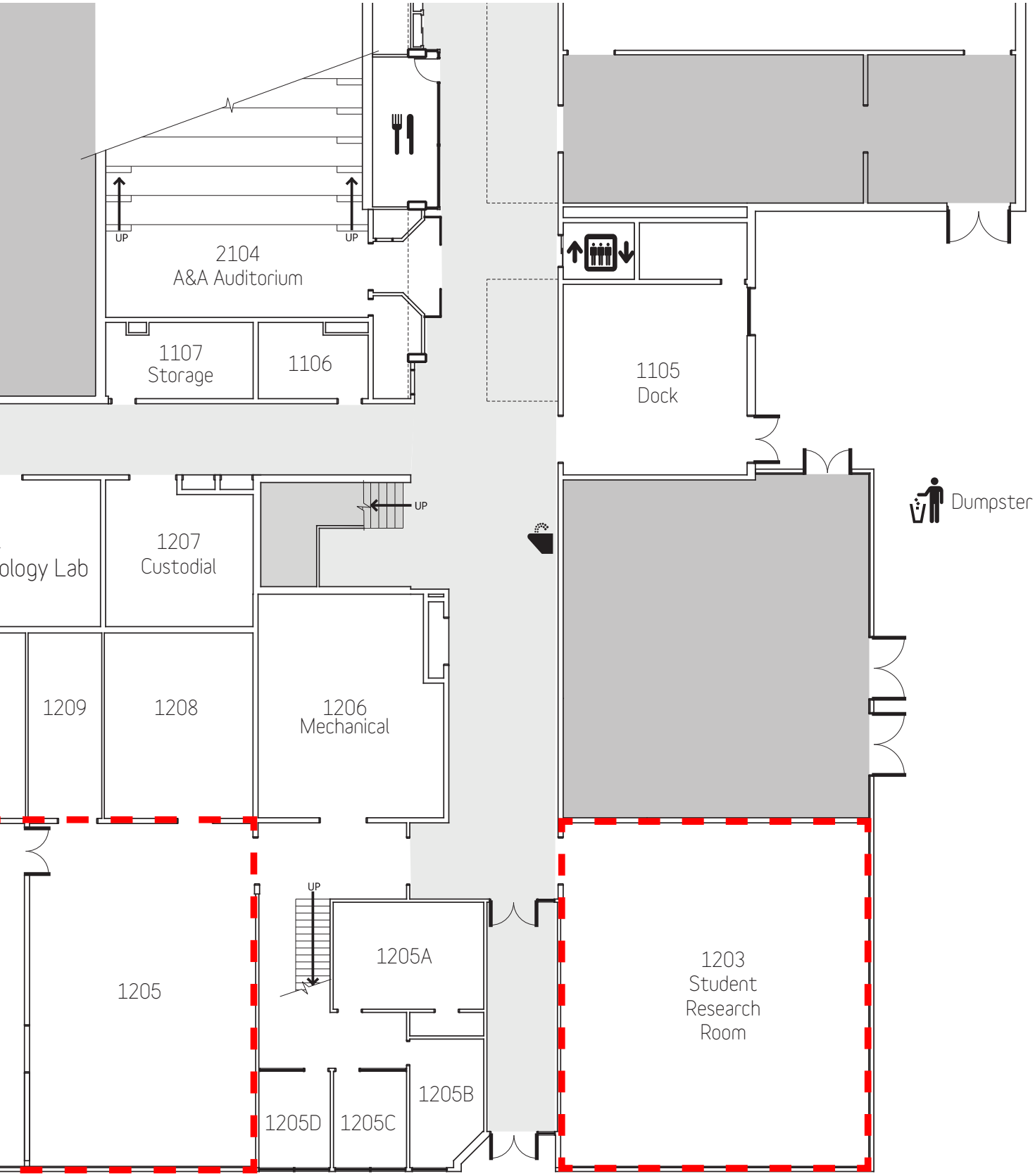
UP
UP
2104
A&A Auditorium
1107
Storage
1106
1105
Dock
Dumpster
UP
ology Lab
1207
Custodial
1209
1208
1206
Mechanical
UP
1205
1205A
1203
Student
Research
Room
1205B
1205D
1205C

3-axis CNC Routers

Onsrud Super-Duty
Fixed Bridge 3-axis CNC Router

OVERVIEW

The FABLab operates two 3-axis CNC routers. Both machines have a 48" x 96" work envelope with 10" of Z-axis clearance. They perform both 2D profiling of flat sheet stock and 3D surface machining of solid materials including wood and foam.

JOB SUBMISSION PROCEDURE

The 3-axis routers are operated by trained Lab Assistants on a set schedule that varies by semester. Please consult the FABLab website for access to the current CNC lab assitant calendar when planning any router work.

File Preparation

Our CAM software (MasterCAM 2017) can handle a majority of vector and surface file types. For most purposes all geometries should be submitted as Rhinoceros 3DM files. Please set the origin and orientation of the file according to the diagram below. It is also helpful to model an outline of the stock to be milled in addition to the design geometries.

Although the machine can move within the limits outlined above, the design of the 3D surface being milled (steepness, curvature, etc.) and the limitations of the tools (limited depth of the bits, potential collision with the tool holder, etc.) affect the feasability of milling. These factors impact the Z-axis travel almost exclusively, and students are advised to keep their maximum material size at 48" x 96" x 4".

Talk with a Coordinating Lab Assistant

Think of the Coordinating Lab Assistant as an advisor for your CNC project. The Coordinating Lab Assistants hold regular office-hours in both the FABLab and the design studio to meet with anyone seeking to use the CNC machines. To speak with the Coordinating Lab Assistant look at their office-hours posted on the Scheduling LA Calendar on the FABLab website; you can contact them via emailing at taubmancollegerouter@umich.edu to request an appointment during an available time slot. The Coordinating LA will reply to confirm the appointment. If the calendar is full, you may also try stopping by the FABLab during scheduled office-hours.

Bring your file(s) to the appointment with the Coordinating Lab Assistant. They will review your geometry, discuss material choices and answer any questions you may have. At the end of the appointment, the Coordinating Lab Assistant will work with you to schedule a cut time with a Lab Assistant on the CNC Calendar (also available on the FABLab website).

Material Preparation

It is important that you handle all material preparation prior to you scheduled shift with a Lab Assistant to limit unnecessary delays. This includes material purchase, any lamination that may be required, etc. Please see the *Material Selection Guidelines* and *Solid Block Preparation* sections below for further information on material preparation.

If you are planning on using a non-standard material please consult with the Coordinating Lab Assistants or Research Associates. prior to placing your order as specialty router bits may be required. Due to the nature of the machinery the FABLab reserves the right to refuse the use of any router bits supplied by a student.

Cut with a Lab Assistant

Arrive to your scheduled shift with your prepared file(s) and material. Upon arrival, the Lab Assistant will prepare the necessary MasterCAM files and run your project on the router. If you have prepared your Mastercam file yourself the Lab Assistant will review it before cutting to ensure that it has been set up properly for the FABLab machines.

Students are required to be present for the duration of their cut in order to make any necessary decisions that could affect the finished piece and to assist the Lab Assistant when neccessary. It is recommended that students pay attention to how the Lab Assistant sets up their file and runs the CNC router to better understand the limitations of the process.

Clean Up and Pay

It is the student's responsibility to clean up after the cut is complete. All scrap material must be taken to the dumpster located outside the Art & Architecture Shop and all debris/dust must be swept and properly discarded. Additional cleaning may be necessary depending on the circumstances of the cut.

Once cleanup is complete, the Lab Assistant will give you a pay-ticket for the cut. Please double check the pay-

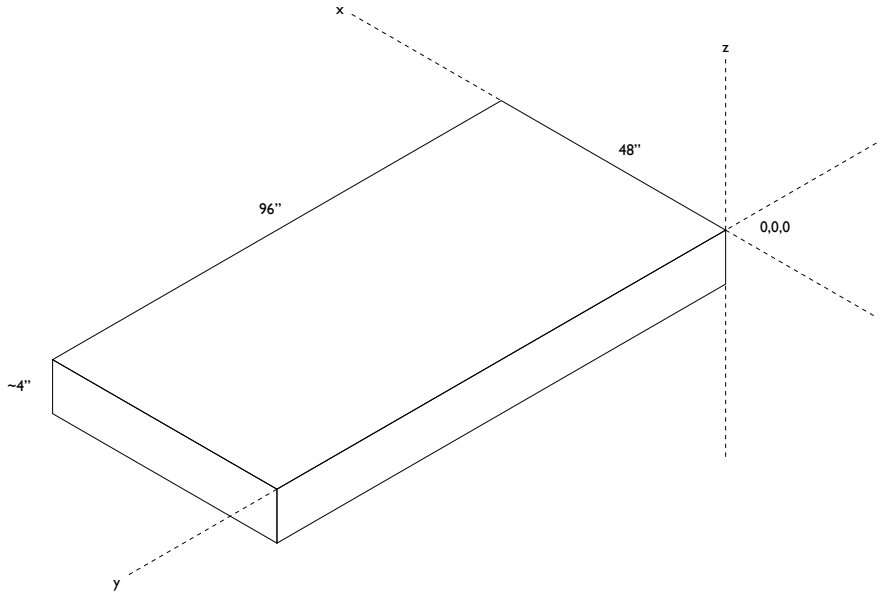

Origin placement & stock orientation for CNC routing.

ticket to make sure it has been accurately filled out in its entirety. Payment for materials and CNC cutting can only be made at the Media Center. After making your payment the Media Center will return the pay-ticket and give you a receipt - **be sure to staple the receipt to the pay-ticket.** Place the two items to the mailbox outside of the FABLab Manager's office (room 1225) so that the payment can be resolved in the FABLab's job database. **Students who have outstanding charges or do not clean their scrap will not be able to schedule future appointments.**

MATERIAL SELECTION GUIDELINE

Wood-based Sheet Goods

In general plywoods and wood composites (MDF, LDF, OSB, fiberboard, etc.) are all acceptable materials for cutting out 2D profiles and laminating into larger pieces of stock. High-quality plywood and MDF are available for purchase in the FABLab.

Foam

Foam is the best option for milling a large surface out of a solid block. Jobs milled from foam take less time to run than wood and put less wear on the router bits. Foams can also be coated after being milled to produce a more durable surface. Only polyurethane foam and polystyrene foam (pink and blue) should be milled in the FABLab, any other materials should be approved by the FABLab Manager or Research Associates.

Wood Solids

If something more durable than foam is necessary, you can create a solid block of material from sheet material. Plumcreek MDF is the preferred material when laminating sheet stock for surface milling as it mills quickly and provides a high-quality surface. Please see the Solid Block Preparation section below for instructions on how to properly prepare laminated stock.

Plastic

Various types of plastic can be cut with the CNC, but it is in general more difficult than wood and often require special tooling to obtain a high-quality finish.

SOLID BLOCK PREPARATION

Before gluing your sheets together, remove as much material as possible with standard woodworking tools or

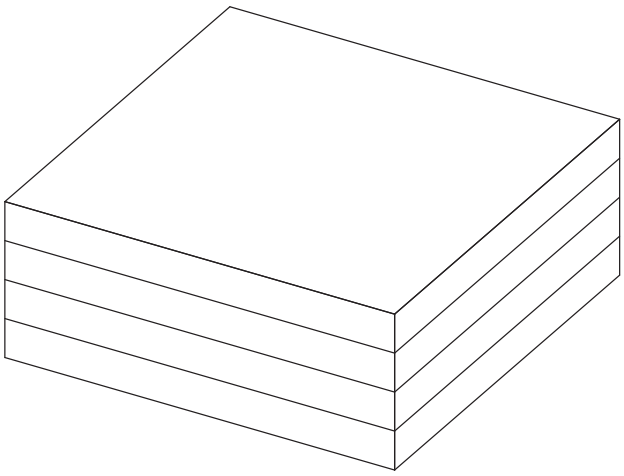

Solid block laminated from untrimmed material.

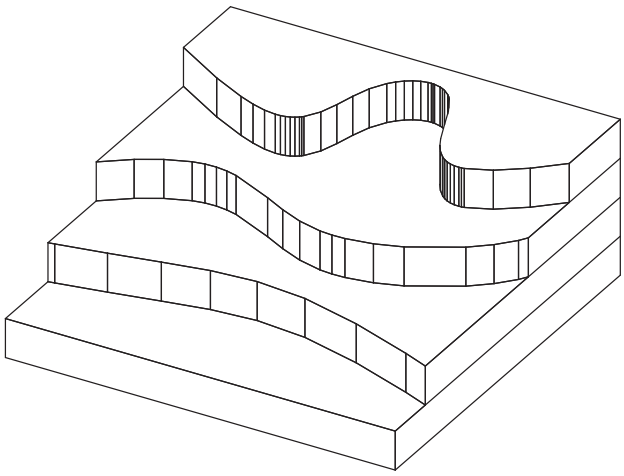

Solid block laminated from trimmed material.

through 2D profile cuts with the router. In looking at the two examples above, the time difference between milling the surface out of the first block versus second block could be measured in hours. The second block also creates considerably less material waste and dust.

Once your individual layers have been prepared, apply glue evenly and thoroughly upon a clean surface before placing it in the vacuum-press table for no less than 6 hours. The total drying time should be a minimum of 24 hours before the scheduled cut time. If the proper procedure is not followed the layers of the block could delaminate, ruining your job mid-route. Students should always avoid using toxic glues such as construction adhesive, as this material will become airborne when routed, running the risk of being inhaled by those in proximity to the machine.

Full instructions for the vacuum-press table are posted in the Zund Room - if you have any additional questions, please talk to a Lab Assistant or the FABLab Manager.

5-axis CNC Router

Onsrud Extreme-Duty
Fixed Bridge 5-axis CNC Router

OVERVIEW

The FABLab has a single 5-axis CNC router located in the High Bay. The two additional axis of freedom allow the cutting head to tilt and rotate, allowing for more complex cutting operations than those available on the 3-axis routers. When coupled with its larger work volume (61" x 98" x 24") and some user-ingenuity, there is little an experienced operatior can't do with this machine.

ACCESS PROCEDURE

Due to the complexity of preparing MasterCAM files for the 5-axis CNC router and the experience needed to run the machine, access to the equipment is extremely limited. If you have a project that you would like to run on the 5-axis CNC router, please discuss it in advance with the FABLab Manger and FABLab Research Associates. Often projects that students think need the 5-axis CNC router can be accomplished with the 3-axis CNC router, which the CNC Coordinators could give guidance.

MATERIAL SELECTION GUIDELINE

The 5-axis CNC router can be used to route the same materials as the 3-axis CNC router, though its dust collection is not as efficient. Due to its large work envelope it is frequently used to route large blocks of foam or tooling board.

3-axis CNC Milling Machines

Southwestern TRAK DPM SX2
CNC Knee Mill

HAAS VF-2SSYT
Vertical Milling Center

OVERVIEW

The FABLab has two 3-axis CNC milling machines for the processing of metals and plastics. In some ways very similar to the 3-axis CNC routers, these machines are much more rigid and capable of working at the lower spindle RPMs necessary for cutting hard materials. While MasterCAM can be used to program both machines, the TRAK DPM can also be used for traditional manual machining.

ACCESS PROCEDURE

The TRAK DPM SX2 knee mill is currently available to students on a case-by-case basis with the approval and training by the FABLab Director or FABLab Research Associates. The HAAS VF-2SSYT is currently used exclusively for in-house tooling development by the FABLab Director and FABLab Research Associates.

MATERIAL SELECTION GUIDE

While both machines can machine most metals including stainless steels, the majority of work is done in aluminum due to its machinability. Plastic components requiring a high accuracy can also be milled on these machines.

CNC Abrasive Water Jet Cutter

Flow IFB 4800 Water Jet Cutter

OVERVIEW

The CNC water jet cutter is designed for cutting 2D geometries out of flat sheet materials such as metal plate, plate glass, and plastics and has an operable work envelope of 96" x 48" x ~8". It is important to take note that the water jet cuts completely through the material and does not allow for cut depth control like the CNC routers or CNC milling machines.

JOB SUBMISSION PROCEDURE

The water jet cutter is operated by trained Lab Assistants on a set schedule that varies by semester. Please consult the FABLab website for access to the current water jet Lab Assistant calendar when planning any water jet cutter work.

File Preparation

All tool path programming for the water jet cutter is handled through the proprietary FlowPath software. Cutting geometries can be prepared in any software that can export to a DXF file. The FABLab recommends students use Rhinoceros whenever possible as the geometries exported by Adobe Illustrator and other softwares can pose problems for the Flow software. Instructions on how to properly export a DXF from Rhinoceros can be found on the FABLab website.

Talk with a Coordinating Lab Assistant

Think of the Coordinating Lab Assistant as an advisor for your water jet project. The Coordinating Lab Assistants hold regular office-hours in both the FABLab and the design studio to meet with anyone seeking to use the water jet machine. To speak with the Coordinating Lab Assistant look at their office-hours posted on the Scheduling LA Calendar on the FABLab website; you can contact them via emailing at taubmancollegewaterjet@umich.edu to request an appointment during an available time slot. The Coordinating LA will reply to confirm the appointment. If the calendar is full, you may also try stopping by the FABLab during scheduled office-hours.

Bring your file(s) to the appointment with the Coordinating Lab Assistant. They will review your geometry, discuss material choices and answer any questions you may have. At the end of the appointment, the Coordinating Lab Assistant will work with you to schedule a cut time with a Lab Assistant on the Water Jet Calendar (also available on the FABLab website).

Material Preparation

The water jet machine can cut all metals as well as plastics, rubber, glass, engineered composites, and wood. As the cut is being made with a high-presure jet of water the material must be resistant to moisture, so wood is rarely used

It is important that you handle all material preparation prior to you scheduled shift with a Lab Assistant to limit unnecessary delays. If you are planning on using a non-standard material please consult with the Coordinating Lab Assistants prior to placing your material order.

Cut with a Lab Assistant

Arrive to your scheduled shift with your prepared file(s) and material. Upon arrival, the Lab Assistant will prepare the necessary FlowPath files and run your project on the water jet cutter.

Students are required to be present for the duration of their cut in order to make any necessary decisions that could affect the finished piece and to assist the Lab Assistant when neccessary. It is recommended that students pay attention to how the Lab Assistant sets up their file and runs the water jet cutter to better understand the limitations of the process.

Clean Up and Pay

It is the student's responsibility to clean up after the cut is complete. Small scrap material must be taken to the scrap bin located next to the roll-top door in the FABLab; large pieces of stock should be cut down and removed from the FABLab by the student. Additional cleaning may be necessary in the area surrounding the water jet cutter depending on the circumstances of the cut.

Once cleanup is complete, the Lab Assistant will give you a pay-ticket for the cut. Please double check the pay-ticket to make sure it has been accurately filled out in its entirety. Payment for materials and water jet cutting can only be made at the Media Center. After making your payment the Media Center will return the pay-ticket and give you a receipt - **be sure to staple the receipt to the pay-ticket.** Place the two items to the mailbox outside of the FABLab Manager's office (room 1225) so that the payment can be resolved in the FABLab's job database. **Students who have outstanding charges or do not clean their scrap will not be able to schedule future appointments.**

Zünd Knife Cutter

Zünd G3 M-2500 CNC Knife Cutter

OVERVIEW

The Zünd CNC knife cutter is a machine unique to the Taubman College, the only architecture program in the United States to possess one. Designed for cutting 2D geometries out of thin sheet materials such as chipboard, paper, plastics, and fabric, it has an operable work envelope of 98" x 52". A good general rule of thumb is if you can cut a material manually with an Exacto blade, the Zünd will be able to cut the material (only faster and more accurately).

Please note that the FABLab does not supply or sell Zund blades. **Students are required to purchase their own blades prior to their cutting shifts as the Media Center.**

ACCESS PROCEDURE

Students are responsible to cut their own jobs on the Zünd. In order to gain access to the machine any student who wishes to use the Zünd must first be trained by a Zünd Lab Assistant. During the training process the Lab Assistant will walk students through both file preparation and proper machine operation. Detailed information on the procedure for making a training appointment can be found on the FABLab website.

File Preparation

The Zünd cutting software only accepts Adobe Illustrator (*.ai) files, which can be drawn natively in Adobe Illustrator or exported from Rhino or many other CAD softwares. Be sure your files are as clean as possible, limiting the number of line segments and control points. The software reads each layer as a unique operation and your file should be organized accordingly (i.e. Layer 1 as bounding box, Layer 2 as score operation, Layer 3 as first cut, Layer 4 as second cut, etc.).

Reserving Machine Time

To reserve a time to cut, log on to the Zünd Sign-Up Calendar found on the FABLab wesbite. The interface is identical to the system used for reserving laser cutter time, a process most students are familiar with. Reservations are made in hour-long increments, with a maximum of 3 consecutive hours at a time. You are only allowed 3 hours/day and up to 9 hours/week. If you have reserved time on the Zünd and decide to not use that time, please delete your reservation from the calendar in advance so that your cohort is aware that the machine is available during this time.

Cutting Your File

As with the Laser Cutters, punctuality is pertinent; if you are not at the Zünd machine within 15 minutes of your start time the entire block of time will be considered 'open' for anyone to use.

Each blade/material combination will have slightly separate machine settings, so be sure to perform a test cut with your blade and material prior to running your full job to ensure that the geometry, material and blade all work together as intended.

When running your file be sure to follow all the steps covered by the Lab Assistant in your training session for selecting/installing your blade and setting up your file in the machine's software. If steps are not performed in the correct order (or completely ignored) it is very likely that the Zünd will either generate an error or not cut at all. If you are unsure of the proper procedure consult the handout given to you during your training session, or schedule an appointment to be re-trained on the equipment.

Robotic Workcells

KUKA KR-120 R2700
Robotic Arm

KUKA KR-60
Robotic Arm

KUKA KR-6 R900
Robotic Arm

OVERVIEW

Developed for the manufacturing industry as process-agnostic positioning devices, industrial robots are highly flexible machines capable of quickly introducing precision and repeatability to a near-infinite number of processes. Current research into their architectural implications leverage this notion, interrogating the expanded intersection of the material and formal domains allowed through their use.

The FABLab has three robotic workcells at its disposal: the first is located in the High Bay and contains two KUKA KR-120 industrial robots mounted on linear axes; the other two workcells can be found in room 1205 and is composed of two stationary KUKA KR-60 industrial robots and two stationary KUKA KR-6 industrial robots.

ACCESS PROCEDURE

Every M.Arch student is introduced to robotic processes through the required course ARCH537. Due to the time associated with learning to the use the robots, their use is primarily limited to projects associated with dedicated coursework taught in the FABLab. If you have an individual job that you feel requires the robots, contact the FABLab Staff to discuss the application and possible next steps.

Typically, students first learn to use the smallest KUKA KR-6 industrial robots, which allows them to eventually move to the larger robotic workcells. Tooling and established processes become more complex with the larger workcells, but the controls and programming are similar. Due to the complexity of kinematics, there is no simple answer for how large a workpiece can be; in general is must fall within the maximum physical limits of the robotic arm.

RESEARCH

The material capabilities of the robots are largely determined by their tooling, often developed around a specific material manipulation or research trajectory. Past projects have been successfully developed about working with wood veneer, sheet metal, metal rod, plaster, stone, glass, and thermoplast polymers.

3D Printers

Dimension UPrint SE

Dimension 1200 SST 3D Printer

Dimension 768 SST 3D Printer

OVERVIEW

3D printers are capable of taking digital geometry in the form of a stereolithographic file (.stl) and producing small physical models. This file type can be exported from a variety of different 3D modeling softwares, such as Rhino, Maya, and 3D Studio Max. The FABLab currently has three 3D printers available to students, which all print with ABS plastic. While the most hands-off of the services provided by the FABLab, it can also be the most costly as it is billed out by the volume of the model produced, not by the amount of time the machine is running. Please visit the FABLab website or talk to a 3D Printer Lab Assistant for up-to-date 3D printing costs.

JOB SUBMISSION PROCEDURE

The 3D printers are managed by trained Lab Assistants on a set schedule that varies by semester. Students are required to prepare their 3D models and then submit them for printing by a Lab Asssistant. Please allow adequate lead times for printing as jobs are typically processed overnight. During busy periods of the semester, the turn-around time between job submission and printing can be several days to a week.

File Preparation

The printer software only accepts closed surface (aka 'water tight') STL files; often the most difficult tasks in the 3D printing process is producing a water tight STL from the design geometry. Rhino's help files includes a thorough tutorial on STL file preparation titled "STL import/export" that students should use as a resource for file preparation. Always verify that your model does not exceed the dimensional limitations of build envelopes diagrammed below.

Additional trouble shooting tips for STL creation can be found on the FABLab website in the 3D printer category. It is expected that all students generate the STL file on their own prior to submitting the file for printing. If you are unable to successfully create a proper file, contact a 3D Printer Lab Assistant for further advice. They may be able to help correct the file if there is not a printing queue to process, but this is not guaranteed. Unfortunately at times the only way to make a printable STL file is to recreate the geometry altogether.

It is recommended that Rhino (or another 3D modeling software) is used to estimate a rough cost estimate of the model by volume prior to file submission.

Submitting the File

The best way to submit a file is to include it in an email to the 3D Printer Lab Assistants (taubmancollege3dprinters@umich.edu). In the email be sure to indicate which machine you'd like used and any time constraints that may be placed on the work. After emailing the file, one must fill out a job request form (PDF available on the FABLab website) and place it in the drop box on the door to the 3D print room in the FABLab.

Once the completed form has been received a Lab Assistant will review your submitted file for errors and insert the file into the print queue. If the estimated cost generated by the 3D printer software exceeds your maximum cost indicated on the form, you will be contacted by a Lab Assistant. If you do not reply promptly to any clarification requests you may lose your position in the queue.

Typically the wait for a job is minimal, but during busy times of the year (i.e. around midterm and final reviews) the wait time can be longer. We, the FABLab, reserve the right to limit or deny print jobs which exceed 15 hours to print during these busy times, in order to process all timely student requests. If the print queue is abnormally long you will be contacted by the Lab Assistant with a general time estimate of when you may expect your print to be done. It is in your best interest to submit STL files which are "ready to go".

If the model breaks during the printing process due to machine errors you will be notified by a Lab Assistant; jobs that break because geometries do not meet established guidelines (see below) will not be reprinted for free and you are still required to pay for the print even if you opt not to use it.

Picking up the Print

Completed prints will be removed from the printer by a Lab Assistant and kept in the 3D print room until picked up. Prior to picking up your model you must get your completed job request form from the 3D print room and pay for your print at the Media Center. After making your payment the Media Center, place the receipt in the mailbox outside of the FABLab Manager's office (room 1225) so that the payment can be resolved in the FABLab's job database.

MATERIAL LIMITATIONS

The Dimension ABS printers are FDM printers using an ABS thermoplastic. The machine prints a soluble support structure around the model; after the print is complete the model is place in a heated circulator bath for several hours to dissolve the support material. The support material is the same cost as the model material, though the usage can vary widely depending on the geometry of the model. Support is automatic and is always required. Models made in the ABS printers are strong, even at a minimum wall thickness of .040", however, density and geometry of the part always plays a critical role in the expectations of a printed object.

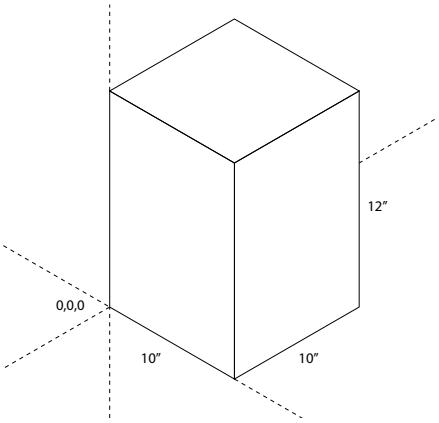

Dimension 1200es
Build Envelope

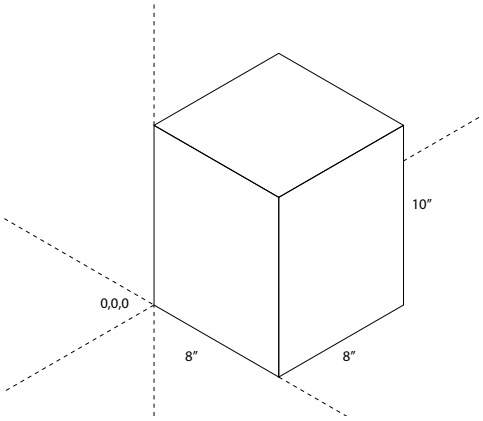

Dimension 768
Build Envelope

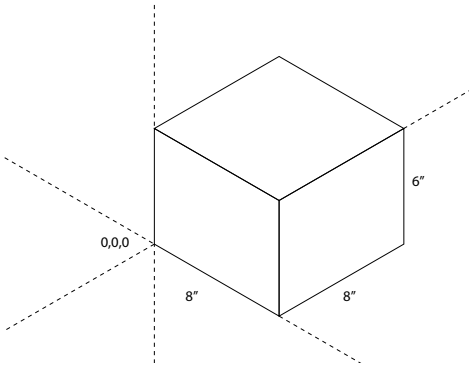

Dimenstion UPrint SE
Build Envelope

Finishing

Models can be printed in sections and adhered together after printing. ABS prints can be glued (if in pieces) with cyanoacrylate, and can then be primed or finished further. There are plenty of online resources related to post processing of ABS prints, which can be explored at your own ambition.

Laser Cutters

Universal Laser Systems VLS6.60

OVERVIEW

The laser cutters are, by far, the most frequently used pieces of equipment in the FABLab, allowing students to engrave and cut 2D geometries from sheet material like paper/wood products and select plastics. The operable area of the machine varies between the two models available to Taubman College students, please refer to the cutting area diagrams included on the next page for size limitations.

ACCESS PROCEDURE

Members of the Taubman College community have access to a total of five laser cutter systems: two LaserCAMM systems are located in the A+AB woodshop and three Universal Laser Systems are located in the west computer lounge in the 3rd floor studios.

Universal Lasers

In order to use the Universal laser systems you must go through an orientation with a Lab Assistant. Typically these orientation sessions are handled during new student orientations, granting students access to the machine for the entirity of their degree period. These machines are available for use on a rolling weekly sign up basis. Students may sign up for two hours per week via the scheduling calendar on the FABLab website. If no one signs up for a certain time, it is available on a first-come-first-serve basis. If it is 15 minutes past the start of a reserved time slot, the slot is canceled and is considered available until the start of the next reserved time slot.

Once you have been trained and authorized to use the laser, you will be able to log in to the system using your uniqname/password. The laser can only be activated by logging in to the PC connected to it. You must log off when finished. Not logging off can result in the suspension of laser privileges. The power and speed settings are controlled by a printer driver. The laser can be used to cut a wide variety of materials, including most natural materials. Chipboard up to 16 ply can be cut. Fabrics should only be cut if tested by a Lab Assistant; generally they must be dampened to cut without burning. Acrylic plastics, both cast and extruded, can be cut. Decent quality can be obtained up to 1/4"; beyond this multiple

passes are necessary and quality is reduced. **Polycarbonate(Lexan), copolyester, and PVC should not be cut on the machines because of the chemical fumes they offgas.** If you wish to cut a material not listed here please consult with a Lab Assistant prior to cutting.

Please keep the following points in mind while using the laser cutter:

• You must clean up after yourself - no exceptions.
• Do not place materials on top of the machine, it is not a worksurface.
• You **absolutely must not** leave the machine unattended while cutting, no matter how experienced you are. If the machine is found cutting unattended it will be shut down. Leaving the laser running unattending can result in revocation of laser priviledges for the logged in user.
• If a problem occurs, or you observe anything out of the ordinary, immediately send an email to taubmancollegelasers@umich.edu

LaserCAMM Lasers

Located on the second floor of the Art & Architecture Shop, the LaserCAMM machines are generally available for use on a sign-up basis during regular woodshop hours. The interface for these machines is very different from that of the Universal machines; students should consult with the on-duty shop coordinator for orientation and assistance using the machines. The machines have a more powerful laser than the Universal machines and are better suited for cutting thicker materials such as 0.25" acrylic and 3+ ply chipboard.

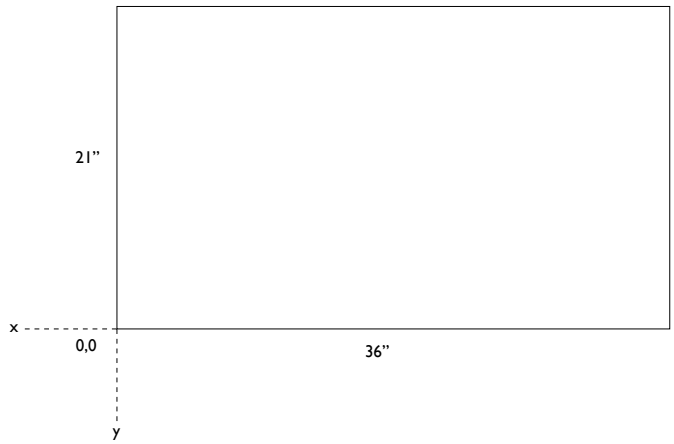

LaserCAMM cutting area

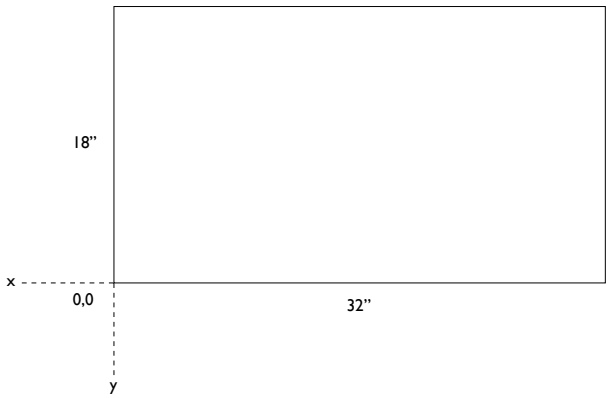

VLS cutting area

Digitizer

Microscribe 3D digitizer

OVERVIEW

The Microscribe Digitizer is located in the 3D print room in the FABLab, allowing one to create points in Rhino based off of a physical model. The working volume is approximately 20" x 20" x 30".

To activate the digitizer within Rhino, use Tools > 3-D Digitizer > Connect then select MicroscribeDigitizer-Support. You will be promted to enter an X and Y axis and specify a point in your Rhino file to match the origin of the digitized area. You can then use the digitizer as you would a mouse.

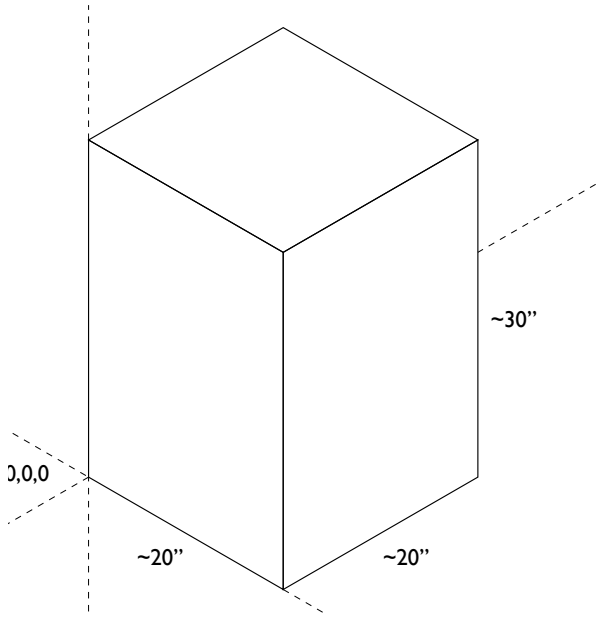

Digitizer work envelope

Machine Rates

OVERVIEW

Machine rates vary due to the differences in the complexity of the set-up required for each processes, as well as the cost of tooling, materials, and maintenance that are associated with each machine. The Laser and ZUND machines are free to use for the entire Taubman College community, and so no information is listed here with regard to these processes. Additionally, all processes have an associated job-ticket that details the procedures and costs, and they are provided to students and faculty in our facilities.

Machine/Process	Machine Rate [$/Hr]	Assistant Rate [$/Hr]	
3-Axis Router	25	0	Arch. Student
	25	15	Arch. Faculty
	30	15	Art Student
	30	15	Art Faculty
	60	15	External
5-Axis Router	40	0	Arch. Student
	40	15	Arch. Faculty
	80	15	Art Student
	80	15	Art Faculty
	100	15	External
CNC Water-Jet	50	0	Arch. Student
	50	15	Arch. Faculty
	80	15	Art Student
	80	15	Art Faculty
	100	15	External
HAAS 3-Axis Mill	50	0	Arch. Student
	50	15	Arch. Faculty
	100	15	Art Student
	100	15	Art Faculty
	120	15	External
KUKA Robots	40	0	Arch. Student
	40	15	Arch. Faculty
	80	15	Art Student
	80	15	Art Faculty
	100	15	External

	Machine Rate [$/in^3]	
3D Printing	5	Arch. Student
	5	Arch. Faculty
	N/A	Art Student
	N/A	Art Faculty
	N/A	External

Material Sales

OVERVIEW

The FABLab provides a range of materials specifically for our equipment, as well as for general use by the community. The FABLab does not limit the use of

Material	Description	Cost
PETG	Thin gauge plastic which cuts and creases well on the ZUND Knife Cutter	$27/sheet
Corruplast	Corrugated Polypropylene. Cuts cleanly on the Zund Knife Cutter. Can be partially cut to produce live hinges.	$15/sheet
Yupo	Synthetic paper which cuts and creases well on the Zund Knife Cutter. Can also be laser-cut	$5/sheet
Cardboard	Cuts cleanly on the Zund Knife Cutter. Can be partially cut to produce live hinges.	$7/sheet
Foam	25 psi polystyrene rigid insulation, which can be used for both milling and hot-wire cutting. Sold in linear foot increments of 1'x2'; available in 2" and 3" thicknesses.	2": $5/linear ft 3": $7/linear ft
Plywood	13-ply Baltic Birch is sold for CNC milling. 4'x8' sheets are sold in quarter sheet increments. Ideal for 2D cutting and 3D surfacing.	$20/quarter sheet
MDF	Medium Density Fiber Board is sold for CNC milling. 4'x8' sheets are sold in quarter sheet increments. Ideal for 2D cutting and 3D surfacing.	$12/quarter sheet

Suppliers

MATERIAL SUPPLIERS

Aircraft Spruce
Specialty metals, woods and composites.
www.aircraftspruce.com

Alro Metals
Local Metal supply

ASAP Metal Source
Local metal supplier.
www.asapsource.com

Demand Products
Specialty foam coatings.
www.demandproducts.com/ent.html

AIN Plastics
Cheap local plastic supplier with a wide selection. Catalog available in the lab.
800-521-1757 in Southfield, MI

McMaster-Carr
See "Ultra-Machinable High-Strength Plastic Foam" and "Polystyrene Foam Sheets."
www.mcmaster.com

Fingerle Lumber
Ann Arbor based lumber supply yard, good source of blue EPS foam and all wood products.
www.fingerlelumber.com
734 663 0581

Plastic-Tech
Local and expensive plastic supplier
www.plastictech-inc.com

Foam N' More & Upholstery
Inexpensive local foam supplier.
www.foamandupholstery.com
248 284 0002

Freeman Manufacturing & Supply
Machinable waxes and foams.
www.freemansupply.com

Polytek
Mail-order molding and rubber supplies.
www.polytek.com

Small Parts
Model making parts and hardware. Catalog available in the lab.
www.smallparts.com

RenShape
Tooling supplies
www.huntsman.com/renshape

TFB Plastics
Good local source of rubber and sculpture supplies.
Pricelist available for tooling foam in the lab.
586 566 7900 in Shelby Township, MI.

All America Pywood
Excellent source of plywoods and wood products. Detroit.
313 891 6880

McCausey
Specialty woods and machining materials.
www.mccauseylumber.com

Reklein Plastics
Somewhat local supplier of high density tooling foams.
Pricelist available in the lab.
586 739 8850 in Sterling Heights, MI.

TOOLING SUPPLIERS

Onsrud Bits
Supplier used in the lab.
www.onsrud.com

MSC Industrial Supply
Large selection of tooling and industrial supplies. Catalog available in the lab.
www.mscdirect.com

McMaster Carr
See "Solid-Carbide Spiral-Flute Router Bits for Wood and Laminates"